ROHS

www.gepu.tw

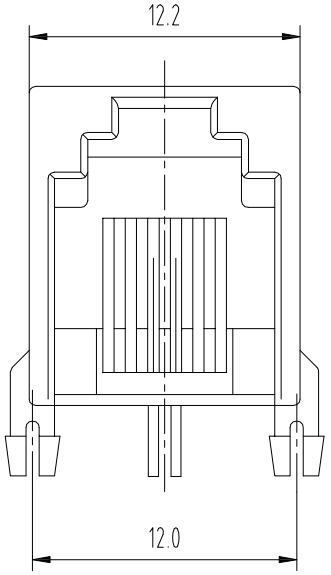

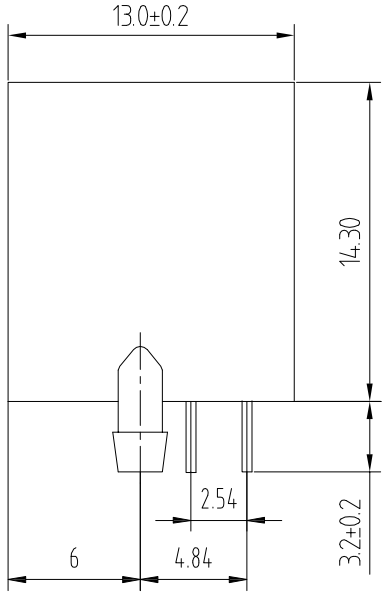

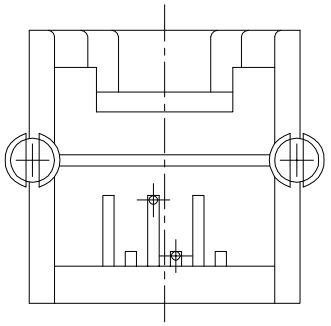

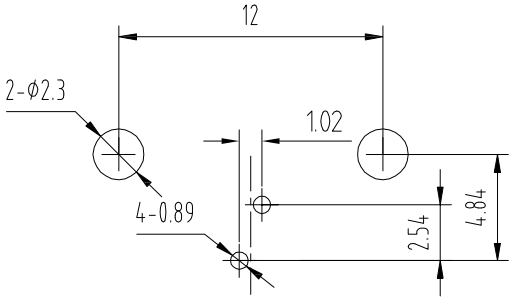

PC Board Layout

Component Side Shown

NOTES:

MATERIAL :

1.HOUSING MATERIAL	:GLASS FILLED POLYESTER UL94V-0.
2.CONTACT MATERIAL	:PHOSPHOR BRONZE Φ0.45mm.
3.PLATING	:GOLD PLATING Fu"~50u"OVER NICKEL.

ELECTRICAL:

1.VOLTAGE RATING	:125 VAC RMS.
2.CURRENT RATING	:1.5 AMP.
3.CONTACT RESISTANCE	:30 MILLIOHMS MAX.
4.INSULATION RESISTANCE	:500 MEGOHMS MIN @ 500V DC .
5.DIELECTRIC WITHSTANDING RESISTANCE	:1000V AC RMS 50Hz. 1MIN.

MECHANICAL:

1. DURRABILITY	:750 CYCLES MIN.
2.PCB RETENTION PRE-SOLDER	:1 LB MIN.

ENVIRONMENTAL:

1. STORAGE	: -40℃~+85℃
2. OPERATION	: 0℃ TO 70℃

ECN NO.	REV.	DATE.	DESCRIPTION.	CHANGE.	CHECK.	APPRO.
———	A	———	NEW	———	———	———

APPROVALS		DATE
DRAWN	ZHIWEI.CHEN	2015.07.07
CHECKED		
APPROVALS		

TOLERANCES ARE				
	30~ 以上	±0.30	ANGLE	±2°
	10~30	±0.20		
	5~10	±0.15		
	~5	±0.10		

GEPU 歌普

TITLE:	RJ CONNECTOR	
PART NO.	RJ11-6W11-DDN-BB-62-G1	
UNIT: mm	SCALE: 1:1	PROJ:
DRAWING NO.	———	SHEET 1 OF 1