**ROHS**

www.gepu.tw

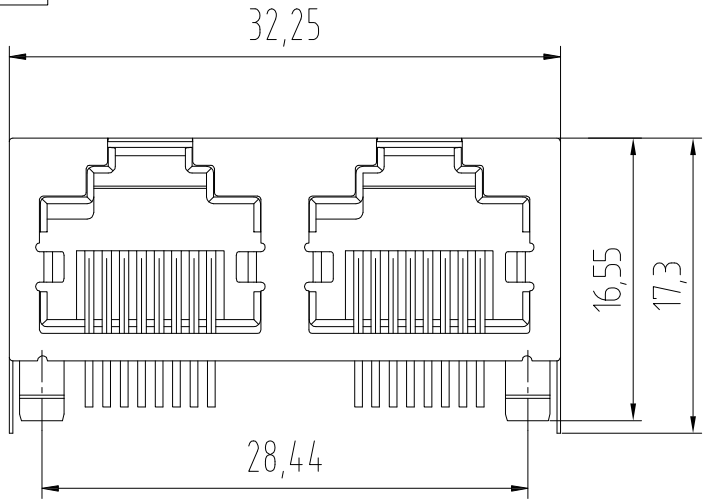


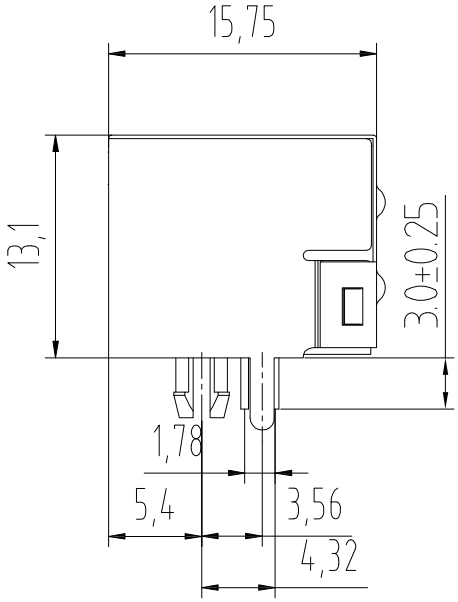


NOTES:

MATERIAL:

| | |
|---|---|
| 1.HOUSING MATERIAL | :GLASS FILLED POLYESTER UL94V-0. |
| 2.CONTACT MATERIAL | :PHOSPHOR BRONZE Φ0.45mm. |
| 3.PLATING | :GOLD PLATING Fu"~50u" OVER NICKEL. |
| 4.SHIELD | :0.20mm THICKNESS COPPER ALLOY WITH NICKEL PLATED. |

ELECTRICAL:

| | |
|---|---|
| 1.VOLTAGE RATING | :125 VAC RMS. |
| 2.CURRENT RATING | :1.5 AMP. |
| 3.CONTACT RESISTANCE | :30 MILLIOHMS MAX. |
| 4.INSULATION RESISTANCE | :500 MEGOHMS MIN @ 500V DC . |
| 5.DIELECTRIC WITHSTANDING RESISTANCE | :1000V AC RMS 50Hz. 1MIN. |

MECHANICAL:

| | |
|---|---|
| 1. DURRABILITY | :750 CYCLES MIN. |
| 2.PCB RETENTION PRE-SOLDER | :1 LB MIN. |

ENVIRONMENTAL:

| | |
|---|---|
| 1. STORAGE | : -40℃~+85℃ |
| 2. OPERATION | : 0℃ TO 70℃ |

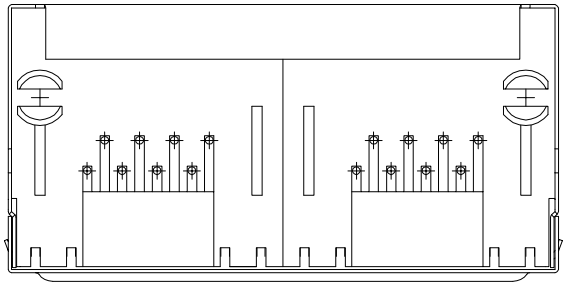

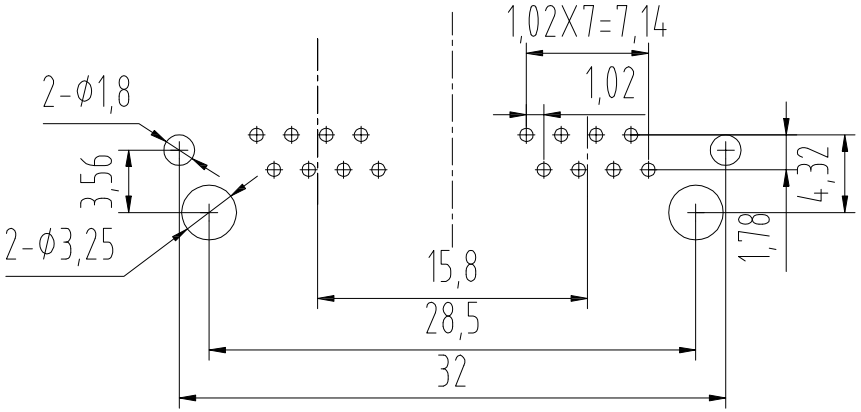


PC Board Layout

Component Side Shown

| APPROVALS | | DATE |
|---|---|---|
| DRAWN | ZHIWEI.CHEN | 2015.07.07 |
| CHECKED | | |
| APPROVALS | | |

GEPU 歌普

| | |
|---|---|
| TITLE: | RJ CONNECTOR |
| PART NO. | RJ45-6W12-DDN-AB-88-B1 |
| UNIT: mm | SCALE: 1:1 |
| DRAWING NO. | ——— |
| PROJ: | SHEET 1 OF 1 |

| TOLERANCES ARE | | | |
|---|---|---|---|
| 30~ 以上 | ±0.30 | ANGLE | |
| 10~30 | ±0.20 | | |
| 5~10 | ±0.15 | ±2° | |
| ~5 | ±0.10 | | |

| ECN NO. | REV. | DATE. | DESCRIPTION. | CHANGE. | CHECK. | APPRO. |
|---|---|---|---|---|---|---|
| | | | | | | |
| | | | | | | |
| ——— | A | ——— | NEW | ——— | ——— | ——— |