ROHS

www.gepu.tw

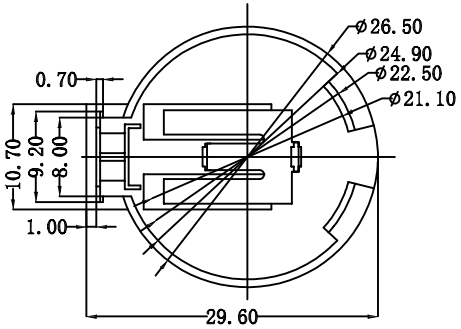

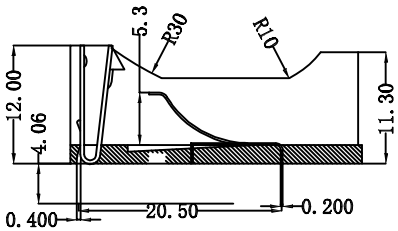

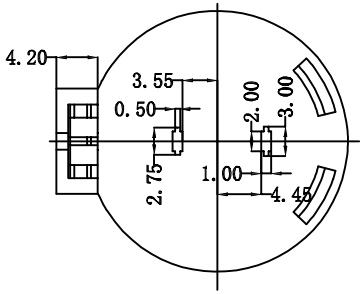

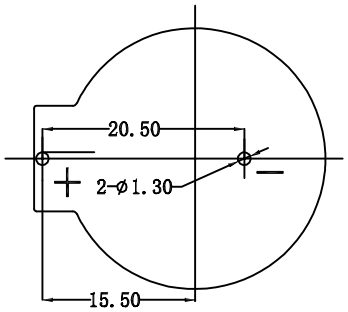

PCB Layout Diagram
Top View

NOTE:

1. MATERIAL:
   a. HOUSING: THERMOPLASTIC GLASS FIBRE UL94V-0
   b. CONTACT: PHOSPHOR BRONZE
      (SURFACE PLATING: Ni100u")
      SEE ORDERING INFORMATION
2. ELECTRIC:
   a. CONTACT RESISTANCE: 30 MILLIOHMS MAX
   b. INSULATION RESISTANCE: 1000 MEGA OHMS MIN
   c. DIELECTNIC VOLTAGE: 500V AC ONE SEC LEVEL
   d. OPERATING TEMPERATURE: -25° C~ +85° C

ORDERING INFORMATION

NO.	PART NAME	Q'TY	MATERIAL	PLATING & COLOR
3	TERMINAL(-)	1	PHOSPHOR BRONZE, T=0.20MM	Ni-Plating
2	TERMINAL(+)	1	PHOSPHOR BRONZE, T=0.40MM	Ni-Plating
1	HOUSING	1	PBT	BLACK

ECN NO.	REV.	DATE.	DESCRIPTION.	CHANGE.	CHECK.	APPRO.
———	A	———	NEW	———	———	———

APPROVALS		DATE
DRAWN	ZHIWEI.CHEN	2015.07.07
CHECKED		
APPROVALS		

GEPU 歌普

TITLE:	电池座
PART NO.	GP07-CR2477-01
UNIT: mm	SCALE: 1:1
DRAWING NO.	———
SHEET 1 OF 1	PROJ:

TOLERANCES ARE		ANGLE
30~以上	±0.30	±2°
10~30	±0.20	
5~10	±0.15	
~ 5	±0.10	