ROHS

www.gepu.tw

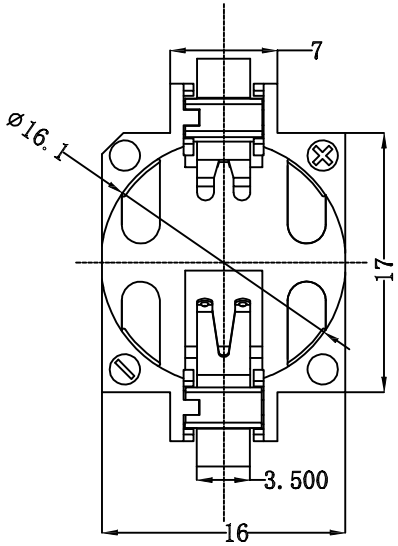

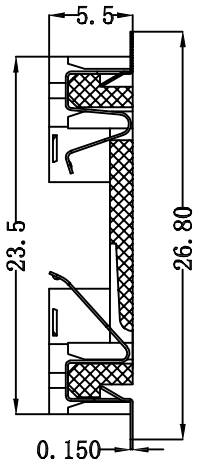

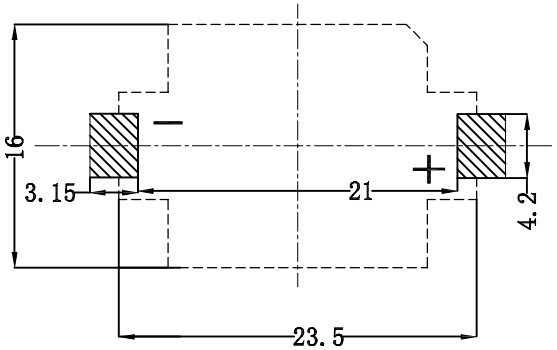

PCB Layout Diagram

Top View

NOTE:

1. MATERIAL:
   a. HOUSING:THERMOPLASTIC GLASS FIBRE UL94V-0
   b. CONTACT:PHOSPHOR BRONZE
      (SURFACE PLATING: Sn100U")
      SEE ORDERING INFORMATION
2. ELECTRIC:
   a. CONTACT RESISTANCE: 30 MILLIOHMS MAX
   b. INSULATION RESISTANCE: 1000 MEGA OHMS MIN
   c. DIELECTNIC VOLTAGE: 750V AC ONE SEC LEVEL
   d. OPERATING TEMPERATURE: -25° C~ +85° C

NO	PAPT NAMF	0'TY	MATFPIAI	PI ATINC ℓ COI OP
3	TERMINAL(-)	1	PHOSPHOR BRONZE, T=0.15MM	Sn-Plating
2	TERMINAL(+)	1	PHOSPHOR BRONZE, T=0.15MM	Sn-Plating
1	HOUSING	1	LCP	WHITE

ECN NO.	REV.	DATE.	DESCRIPTION.	CHANGE.	CHECK.	APPRO.
———	A	———	NEW	———	———	———

APPROVALS		DATE
DRAWN	ZHIWEI.CHEN	2015.07.07
CHECKED		
APPROVALS		

GEPU 歌普

TOLERANCES ARE			ANGLE
30~以上	±0.30		±2°
10~30	±0.20		
5~10	±0.15		
~ 5	±0.10		

TITLE:	电池座 SMT		
PART NO.	GP07-CR1632-01		
UNIT: mm	SCALE: 1:1	PROJ:	
DRAWING NO.	———	SHEET 1 OF 1	