ROHS

www.gepu.tw

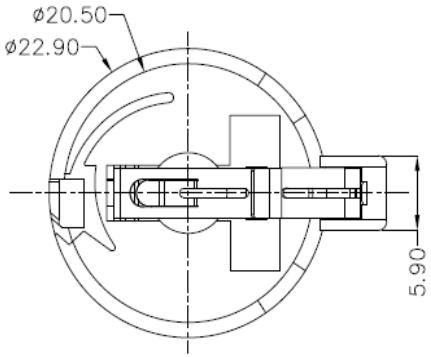

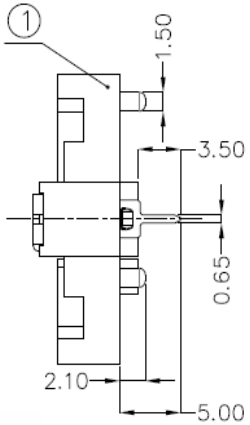

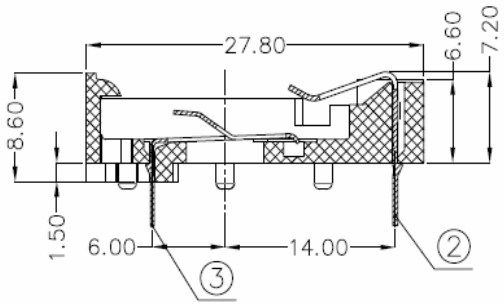

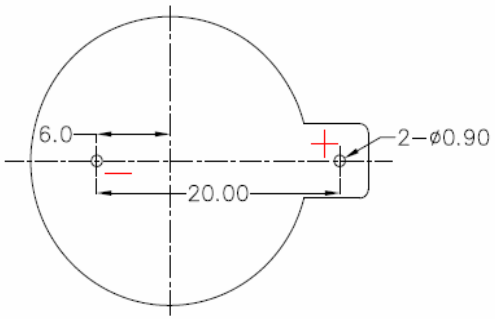

PCB Layout Diagram
Top View

NOTE:

1.MATERIAL:

a.HOUSING:PA66 UL94V-0

b.CONTACT:BRASS

(SURFACE PLATING: Ni100u"-120u")

SEE ORDERING INFORMATION

2.ELECTRIC:

a.CONTACT RESISTANCE: 30 MILLIOHMS MAX

b.INSULATION RESISTANCE: 1000 MEGA OHMS MIN

c.DIELECTNIC VOLTAGE: 500V AC ONE SEC LEVEL

d.OPERATING TEMPERATURE: -25° C~ +85° C

ECN NO.	REV.	DATE.	DESCRIPTION.	CHANGE.	CHECK.	APPRO.
	A		NEW			

APPROVALS		DATE
DRAWN	ZHIWEI.CHEN	2015.07.07
CHECKED		
APPROVALS		

GEPU 歌普

TOLERANCES ARE			ANGLE
	30~以上	±0.30	±2°
	10~30	±0.20	
	5~10	±0.15	
	~ 5	±0.10	

TITLE:	2032-4-1 DIP		
PART NO.	GP07-CR2032-18		
UNIT: mm	SCALE: 1:1	PROJ:	
DRAWING NO.	———	SHEET 1 OF 1	