ROHS

www.gepu.tw

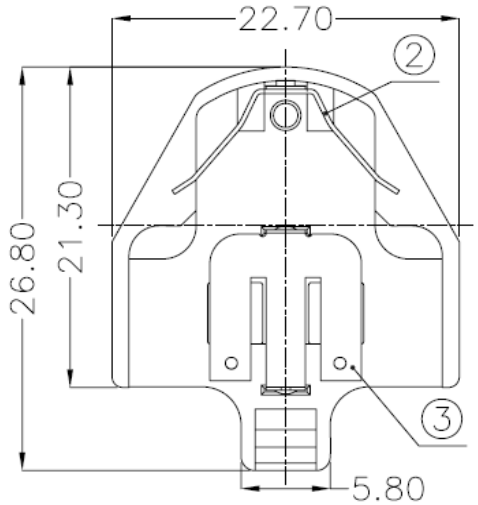

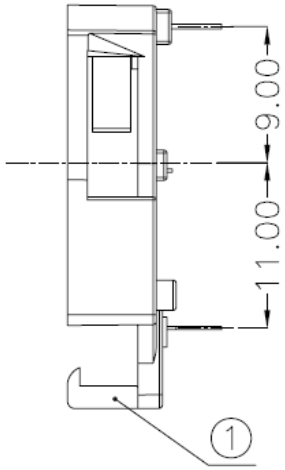

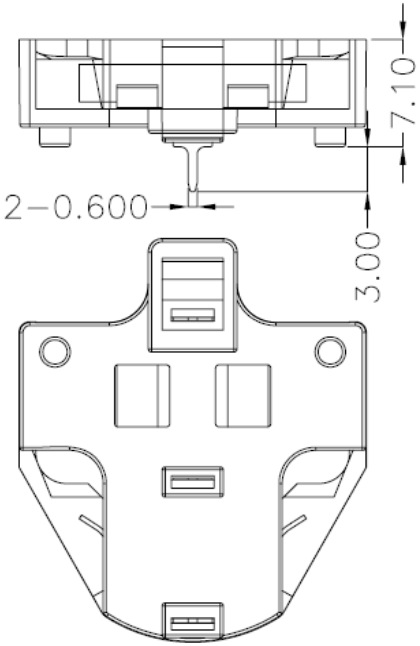

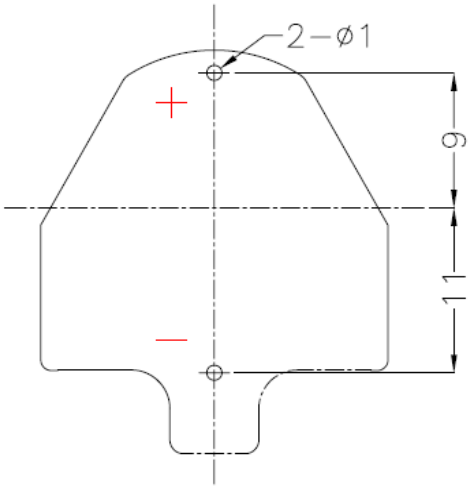

PCB Layout Diagram
Top View

NOTE:
1.MATERIAL:
a.HOUSING:PA66
b.CONTACT:PHOSPHOR BRONZE
(SURFACE PLATING: Sn 100u"-120u")
2.ELECTRIC:
a.CONTACT RESISTANCE: 30 MILLIOHMS MAX
b.INSULATION RESISTANCE: 1000 MEGA OHMS MIN
c.DIELECTNIC VOLTAGE: 500V AC ONE SEC LEVEL
d.OPERATING TEMPERATURE: -25°C~ +85°C

ECN NO.	REV.	DATE.	DESCRIPTION.	CHANGE.	CHECK.	APPRO.
	A		NEW			

APPROVALS		DATE
DRAWN	ZHIWEI.CHEN	2015.07.07
CHECKED		
APPROVALS		

TOLERANCES ARE: 30~以上 ±0.30; 10~30 ±0.20; 5~10 ±0.15; ~ 5 ±0.10; ANGLE ±2°

GEPU 歌普

TITLE:

PART NO. GP07-CR2032-20

UNIT: mm

SCALE: 1:1

PROJ:

DRAWING NO.

SHEET 1 OF 1