ROHS

www.gepu.tw

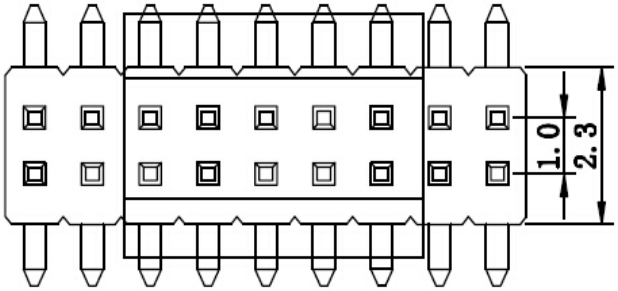

SPECIFICATIONS

Current Rating:	1Amps
Insulator resistance:	500 Megohms min.
Dielectric Withstaanding:	AC 500V
Operating Temperature:	-40 °to +105° C
Max Processing Temp:	230 ° for 30 60 seconds
Contact Materiaal:	Brass
Insulator Material:	NY-6T
PLATING:	GOLD FLASH

UNSPECIFIED TOLERANCE: ±0.20

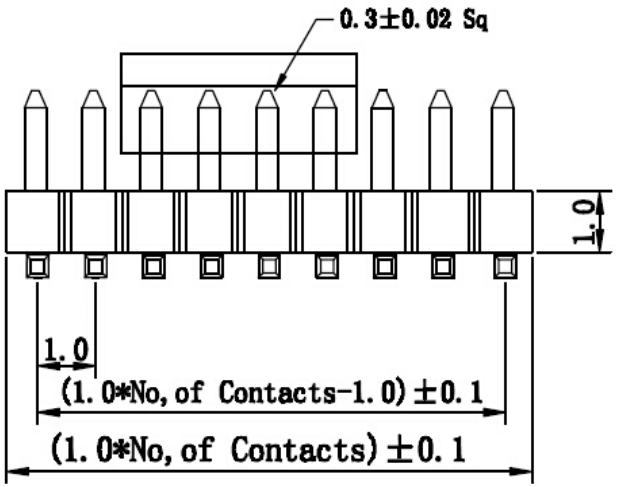

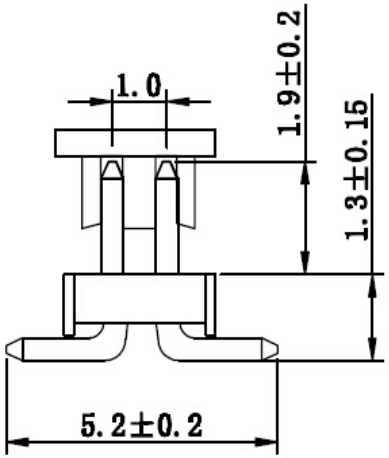

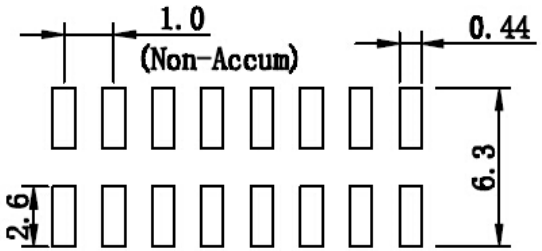

P.C.B LAYOUT

ECN NO.	REV.	DATE.	DESCRIPTION.	CHANGE.	CHECK.	APPRO.
	A		NEW			

APPROVALS		DATE
DRAWN	ZHIWEI.CHEN	2015.07.07
CHECKED		
APPROVALS		

GEPU 歌普

TITLE:	1.0MM SMT 排针
PART NO.	GP26-1010WVS-2xNP
UNIT: mm	SCALE: 1:1
DRAWING NO.	SHEET 1 OF 1

TOLERANCES ARE			ANGLE
	30~以上	±0.30	±2°
	10~30	±0.20	
	5~10	±0.15	
	~ 5	±0.10	