ROHS

www.gepu.tw

1.27*1.27mm(0.050"*0.050")EJECTOR HEADER,DUAL ROW,STRAIGHT

SPECIFICATIONS

Current Rating:1AMP
Contact Resistance:20mΩ Max
Insulation Resistance1000MΩ Min
Withstand Voltage:500V AC/minute
Operation Temperature:-40℃to+105℃

Contact:Brass
plating:Au or Sn Over 30u" Ni
Insulator:High Temperature Thermoplastic
UL94V-0 Rated
Standard:PA6T+30%G.F

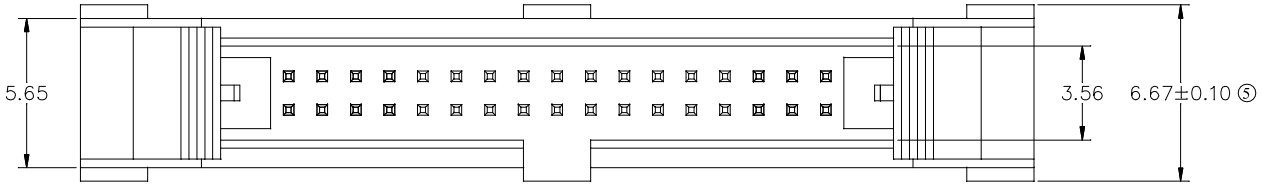

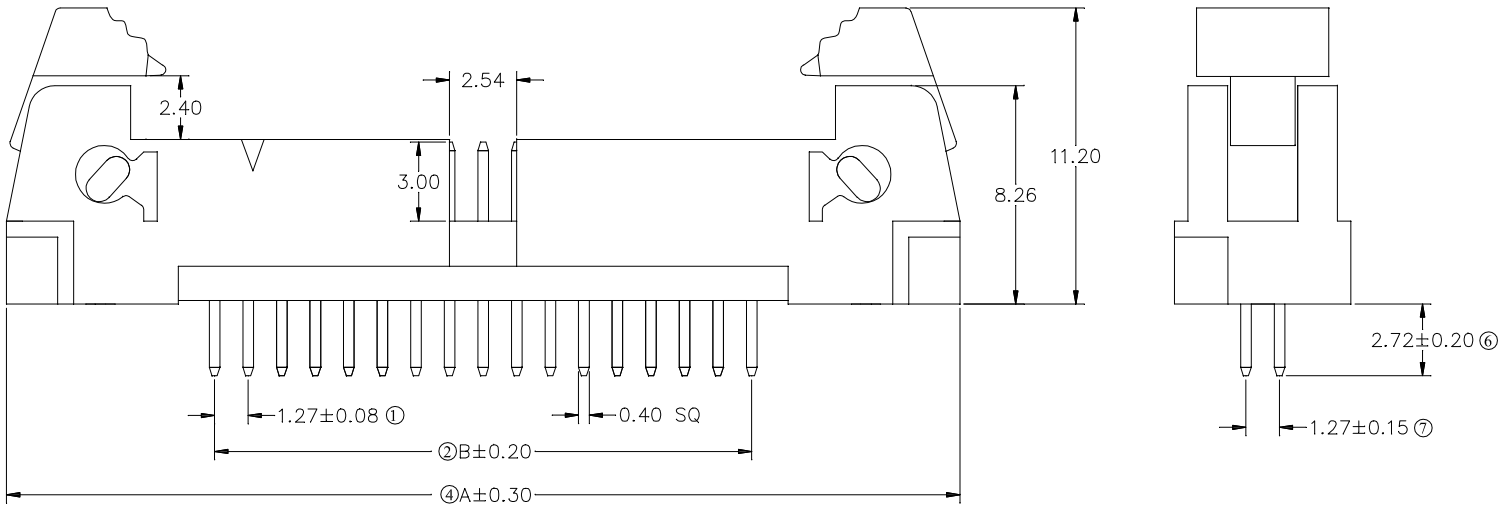

No. of PINS	Dimension Information	
	A	B
10P	20.83	5.08
12P	22.10	6.35
14P	23.37	7.62
20P	27.18	11.43
26P	30.99	15.24
30P	33.53	17.78
40P	39.88	24.13
50P	46.23	30.48
64P	55.12	39.37

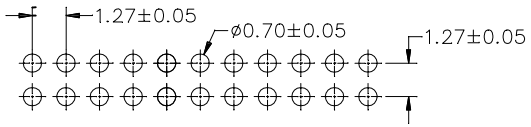

Recommended PCB Layout

ECN NO.	REV.	DATE.	DESCRIPTION.	CHANGE.	CHECK.	APPRO.
	A		NEW			

APPROVALS		DATE
DRAWN	ZHIWEI.CHEN	2015.07.07
CHECKED		
APPROVALS		

TOLERANCES ARE: 30~以上 ±0.30; 10~30 ±0.20; 5~10 ±0.15; ~ 5 ±0.10; ANGLE ±2°

GEPU歌普

TITLE:	1.27mm Crimp Style Connector
PART NO.	GP24-1272WV-2xNP
UNIT: mm	SCALE: 1:1
PROJ:	
DRAWING NO.	
SHEET 1 OF 1	