ROHS

www.gepu.tw

2.00*2.00mm(0.079"0.079")BOX HEADER,STRIGHT

SPECIFICATIONS 规格

CURRENT RATING 电流额定值 : 1.5AMP
CONTACT RESISTANCE 接触电阻值 : 20mΩ Max
INSULATION RESISTANCE 绝缘电阻值 : 1000MΩ Min
DIELECTRIC WITHSTAND 耐压值 : 500V AC/minute
OPERATION TEMPERATURE 工作温度 : -40℃to+105℃

CONTACT MATERIAL 端子材质 : BRASS
HOUSING MATERIAL 塑胶材质 :
STANDARD 标准物料 : PA6T + 30%G.F. ; UL 94V-0 ; BLACK
OPTIONS 可选物料 : OR PA9T + 30%G.F. ; UL 94V-0; BLACK
PLATING 电镀 : Au or Sn Over 30u" Ni

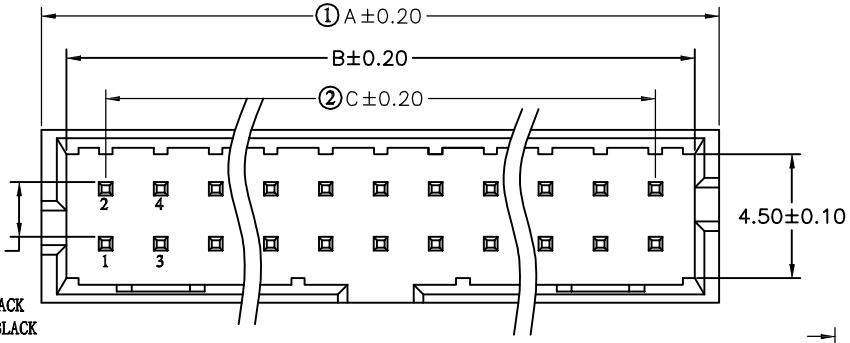

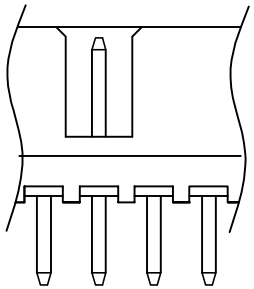

4-12P产品两边没有窗口

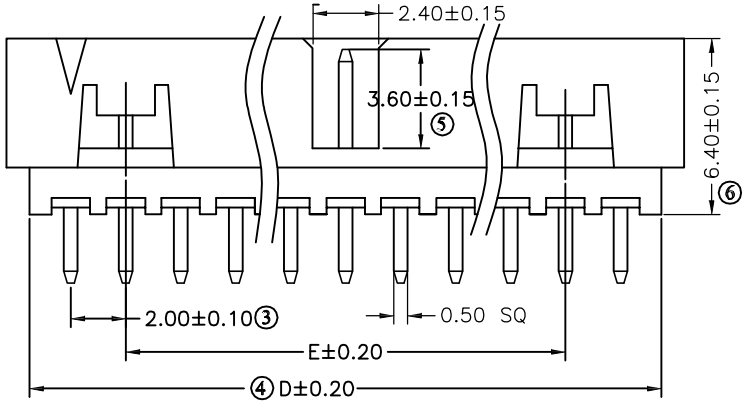

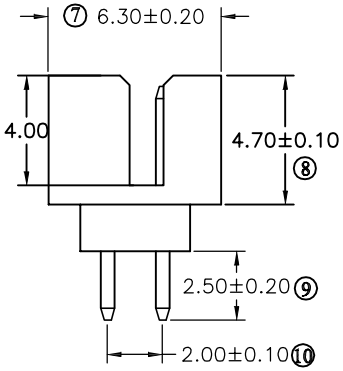

DIM / PIN	A	B	C	D	E
4(2*2P)	2.00	4.85	6.65	5.00	–
6	4.00	6.85	8.65	7.00	–
8	6.00	8.85	10.65	9.00	–
10	8.00	10.85	12.65	11.00	–
12	10.00	12.85	14.65	13.00	–
14	12.00	14.85	16.65	15.00	8.00
16	14.00	16.85	18.65	17.00	10.00
18	16.00	18.85	20.65	19.00	12.00
20	18.00	20.85	22.65	21.00	14.00
22	20.00	22.85	24.65	23.00	16.00
24	22.00	24.85	26.65	25.00	18.00
26	24.00	26.85	28.65	27.00	20.00
28	26.00	28.85	30.65	29.00	22.00
30	28.00	30.85	32.65	31.00	24.00
32	30.00	32.85	34.65	33.00	26.00
34	32.00	34.85	36.65	35.00	28.00
36	34.00	36.85	38.65	37.00	30.00
38	36.00	38.85	40.65	39.00	32.00
40	38.00	40.85	42.65	41.00	34.00
42	40.00	42.85	44.65	43.00	36.00
44	42.00	44.85	46.65	45.00	38.00
46	44.00	46.85	48.65	47.00	40.00
48	46.00	48.85	50.65	49.00	42.00
50	48.00	50.85	52.65	51.00	44.00

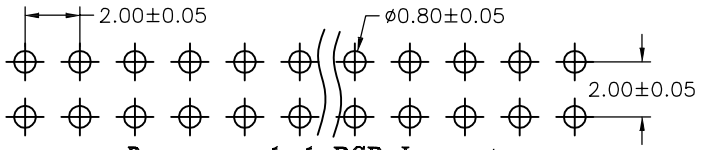

Recommended PCB Layout

0.5*8.5

ECN NO.	REV.	DATE.	DESCRIPTION.	CHANGE.	CHECK.	APPRO.
———	A	———	NEW	———	———	———

APPROVALS		DATE
DRAWN	ZHIWEI.CHEN	2015.07.07
CHECKED		
APPROVALS		

TOLERANCES ARE			ANGLE
	30~以上	±0.30	±2°
	10~30	±0.20	
	5~10	±0.15	
	~ 5	±0.10	

GEPU歌普

TITLE:	2.00mm Crimp Style Connector
PART NO.	GP23-2022WV-2xNP
UNIT: mm	SCALE: 1:1
DRAWING NO.	———
PROJ:	SHEET 1 OF 1