ROHS

www.gepu.tw

Poles	DIM.A	DIM.B
2P	1.25	5.75
3P	2.50	7.00
4P	3.75	8.25
5P	5.00	9.50
6P	6.25	10.75
7P	7.50	12.00
8P	8.75	13.25
9P	10.00	14.50
10P	11.25	15.75
11P	12.50	17.00
12P	13.75	18.25
13P	15.00	19.50
14P	16.25	20.75
15P	17.50	22.00

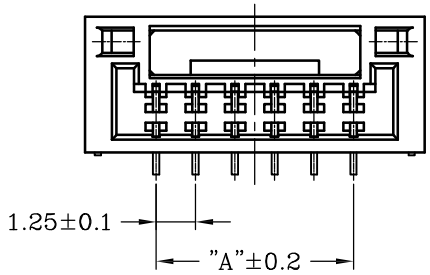

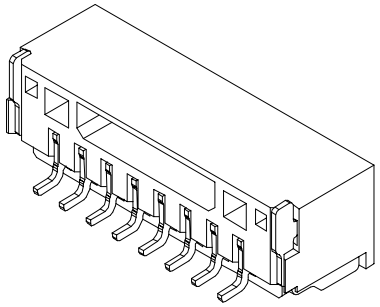

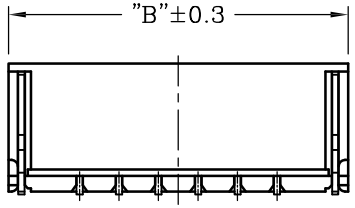

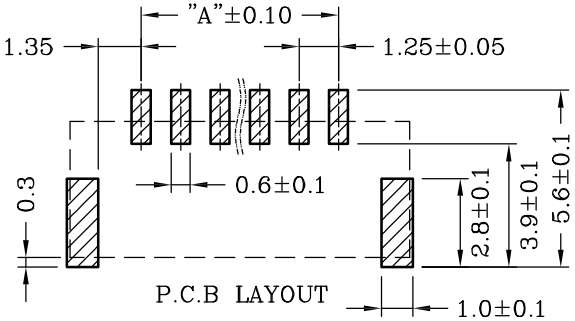

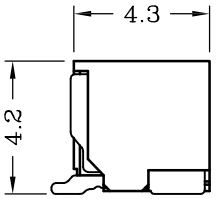

■ 技术参数 SPECIFICATIONS

- ◆ 适用线规: AWG.#26~#30
  Applicable Wire: AWG.#26~#30
- ◆ 额定电压: 50V DC/AC(rms)
  Rated voltage: 50V DC/AC(rms)
- ◆ 额定电流: 1A (AWG.#26)
  Rated Current: 1A (AWG.#26)
- ◆ 耐压值: 100V AC/minute
  Withstand voltage: 100V AC/min.
- ◆ 工作温度: −25℃ ~ +85℃
  Working Temp : −25℃ ~ +85℃
- ◆ 绝缘电阻: ≥100 MΩ
  Insulation resistance: ≥100 MΩ
- ◆ 接触电阻: ≤30 mΩ
  Contact resistance: ≤30 mΩ

■ 材料 MATERIAL

- ◆ 绝缘体: 尼龙9T, UL94−V0
  Insulator: PA9T, UL94−V0
- ◆ 接触针: 磷铜
  Contact PIN: Phosphor Bronze
- ◆ 焊片: 磷铜
  Solder tab: Phosphor Bronze

ECN NO.	REV.	DATE.	DESCRIPTION.	CHANGE.	CHECK.	APPRO.
———	A	———	NEW	———	———	———

APPROVALS		DATE
DRAWN	ZHIWEI.CHEN	2015.07.07
CHECKED		
APPROVALS		

GEPU 歌普

TOLERANCES ARE			ANGLE
	30~以上	±0.30	±2°
	10~30	±0.20	
	5~10	±0.15	
	~ 5	±0.10	

TITLE:			
PART NO.	GP01-1251WRS-NP		
UNIT: mm	SCALE: 1:1	PROJ:	
DRAWING NO.	———	SHEET 1 OF 1	