ROHS

www.gepu.tw

poles	DIN. A	DIM. B
2x2P	6.0	2.0
2x3P	8.0	4.0
2x4P	10.0	6.0
2x5P	12.0	8.0
2x6P	14.0	10.0
2x7P	16.0	12.0
2x8P	18.0	14.0
2x9P	20.0	16.0
2x10P	22.0	18.0
2x11P	24.0	20.0
2x12P	26.0	22.0
2x13P	28.0	24.0
2x14P	30.0	26.0
2x15P	32.0	28.0
2x16P	34.0	30.0
2x17P	36.0	32.0
2x18P	38.0	34.0
2x19P	40.0	36.0
2x20P	42.0	38.0
2x30P	62.0	58.0

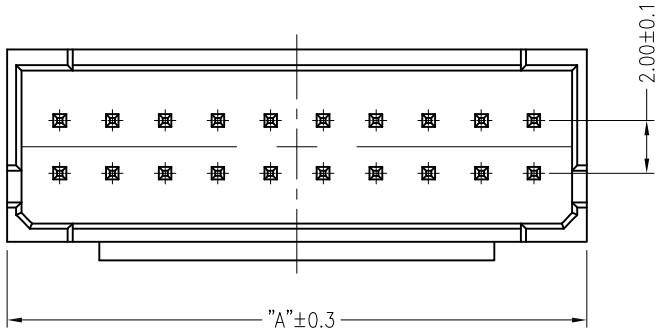

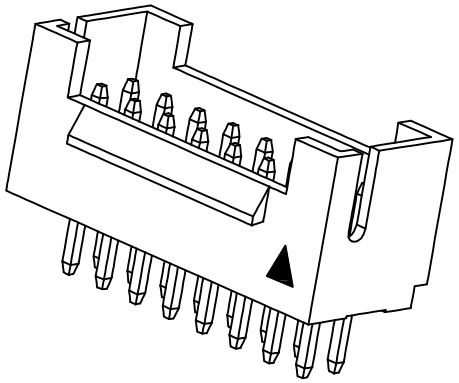

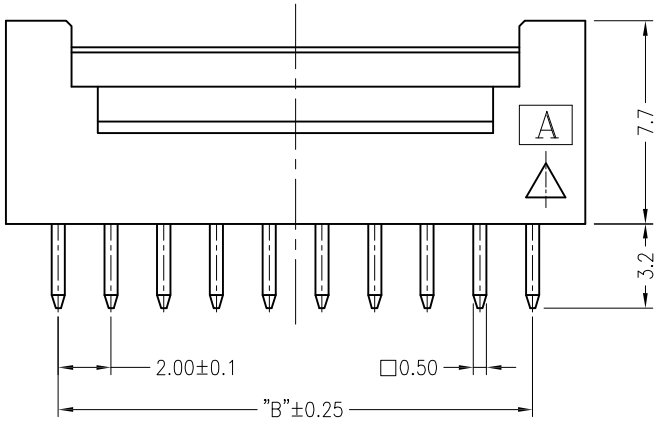

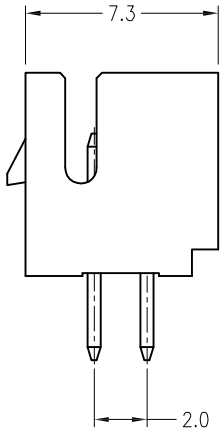

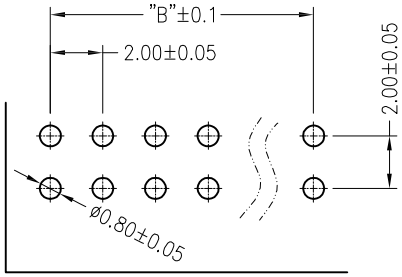

P.C.B LAYOUT

■ 技术参数 SPECIFICATIONS

- ◆ 适用线规: AWG#28~#22
  Applicable Wire: AWG#28~#22
- ◆ 额定电压: 250V DC,AC
  Rated voltage: 250V DC,AC
- ◆ 额定电流: 3A
  Rated Current: 3A
- ◆ 耐压值: 1000V AC/minute
  Withstand voltage: 1000V AC/min.
- ◆ 工作温度: −25°C ~ +85°C
  Working Temp : −25°C ~ +85°C
- ◆ 绝缘电阻: ≥1000 MΩ
  Insulation resistance: ≥1000 MΩ
- ◆ 接触电阻: ≤30mΩ
  Contact resistance: ≤30mΩ

■ 材料 MATERIAL

- ◆ 绝缘体: 尼龙46, UL94−V0
  Insulator: Nylon46, UL94−V0
- ◆ 接触针: 黄铜
  Contact PIN: Brass

ECN NO.	REV.	DATE.	DESCRIPTION.	CHANGE.	CHECK.	APPRO.
	A		NEW			

APPROVALS		DATE
DRAWN	ZHIWEI.CHEN	2015.07.07
CHECKED		
APPROVALS		

TOLERANCES ARE: 30~以上 ±0.30; 10~30 ±0.20; 5~10 ±0.15; ~ 5 ±0.10; ANGLE ±2°

GEPU 歌普

TITLE:

PART NO. GP01-2009WV-2xNP

UNIT: mm | SCALE: 1:1 | PROJ:

DRAWING NO. | SHEET 1 OF 1