ROHS

www.gepu.tw

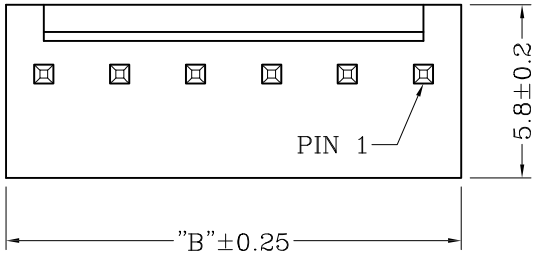

Part No.	DIM.A	DIM.B
2	2.54	5.08
3	5.08	7.62
4	7.62	10.16
5	10.16	12.70
6	12.70	15.24
7	15.24	17.78
8	17.78	20.32
9	20.32	22.86

Part No.	DIM.A	DIM.B
10	22.86	25.40
11	25.40	27.94
12	27.94	30.48
13	30.48	33.02
14	33.02	35.56
15	35.56	38.10
16	38.10	40.64
20	48.26	50.80

■ 技术参数 SPECIFICATIONS

◆ 间距: 2.54 Pitch: 2.54

◆ 极数: 2~20 Poles: 2~20

◆ 适用线规: AWG#28~#22
Applicable Wire: AWG#28~#22

◆ 额定电压: 250V DC,AC(rms)
Rated voltage: 250V DC,AC(rms)

◆ 额定电流: 2.5A AC,DC
Rated Current: 2.5A AC,DC

◆ 耐压值: 1500V AC/minute
Withstand voltage: 1500V AC/min.

◆ 工作温度: −25°C ~ +85°C
Working Temp : −25°C ~ +85°C

◆ 绝缘电阻: ≥1000 MΩ
Insulation resistance: ≥1000 MΩ

◆ 接触电阻: ≤20mΩ
Contact resistance: ≤20mΩ

■ 材料 MATERIAL

◆ Wafer: 尼龙66（Nylon66）, UL94−V0

◆ PIN: 黄铜Brass

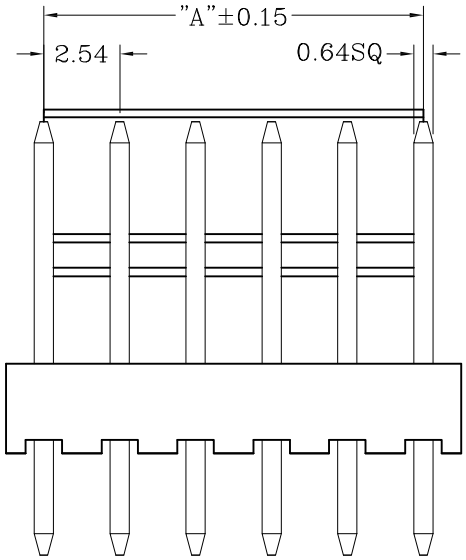

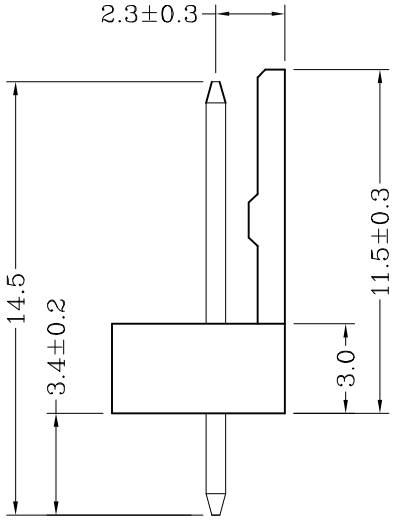

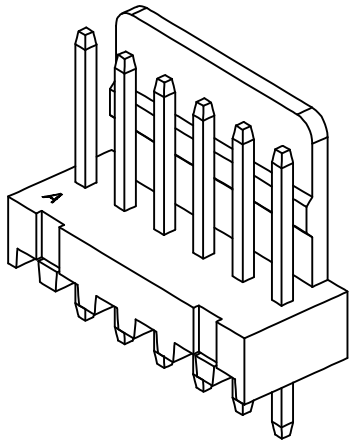

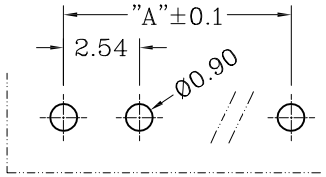

P.C.B LAYOUT

ECN NO.	REV.	DATE.	DESCRIPTION.	CHANGE.	CHECK.	APPRO.
———	A	———	NEW	———	———	———

APPROVALS		DATE
DRAWN	ZHIWEI.CHEN	2015.07.07
CHECKED		
APPROVALS		

TOLERANCES ARE: 30~以上 ±0.30; 10~30 ±0.20; 5~10 ±0.15; ~ 5 ±0.10; ANGLE ±2°

GEPU 歌普

TITLE:

PART NO. GP01-2543WV-NP

UNIT: mm SCALE: 1:1 PROJ:

DRAWING NO. ———

SHEET 1 OF 1