**ROHS**

www.gepu.tw

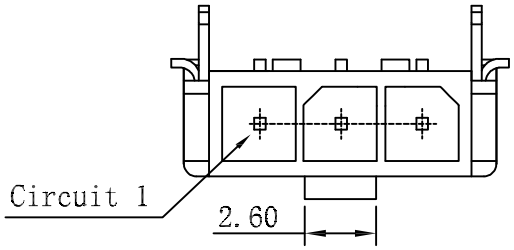


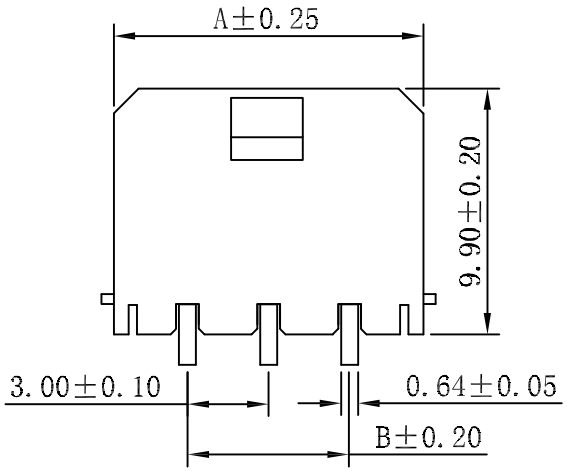


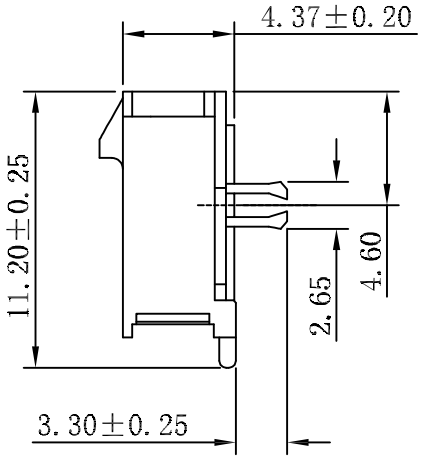


## ■ SPECIFICATIONS

- Voltage rating: 250V AC, DC
- Current rating: 5A, AC, DC
- Withstanding Voltage: 1500V AC/minute
- Insulation resistance:1000MΩ min
- Temperature range: -25° C~+85° C
- Contact resistance: 20mΩ max

## ■ WAFER

- Part No.: 3045WRS-NP-L
- Poles : 02-12P
- Housing Material: LCP UL94V-0 Black
- Ter Material: Brass
- Solder Tabs Material: Brass
- Contact Area Plating: Tin-Plated
- The Dimension Marked "▼" Must Be Recorded

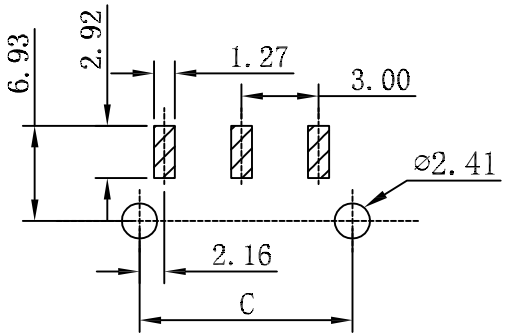


P.C.B. LAYOUT

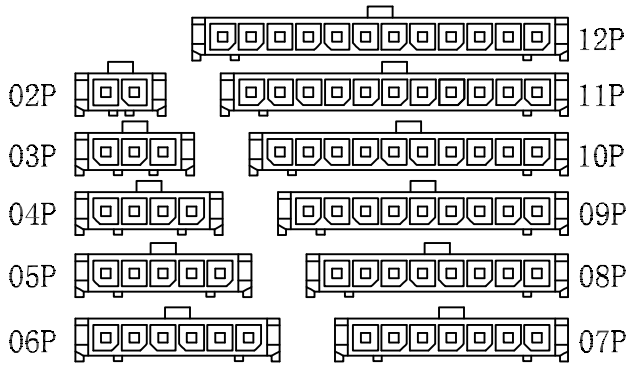


CIRCUIT SIZE LAYOUT

| Part No | Dimensions (mm) | | |
|---|---|---|---|
| | A | B | C |
| 02 | 9.65 | 3.00 | 7.30 |
| 03 | 12.65 | 6.00 | 10.30 |
| 04 | 15.65 | 9.00 | 13.30 |
| 05 | 18.65 | 12.00 | 16.30 |
| 06 | 21.65 | 15.00 | 19.30 |
| 07 | 24.65 | 18.00 | 22.30 |
| 08 | 27.65 | 21.00 | 25.30 |
| 09 | 30.65 | 24.00 | 28.30 |
| 10 | 33.65 | 27.00 | 31.30 |
| 11 | 36.65 | 30.00 | 34.30 |
| 12 | 39.65 | 33.00 | 37.30 |

| ECN NO. | REV. | DATE. | DESCRIPTION. | CHANGE. | CHECK. | APPRO. |
|---|---|---|---|---|---|---|
| | | | | | | |
| | | | | | | |
| | A | | NEW | | | |

| APPROVALS | | DATE |
|---|---|---|
| DRAWN | ZHIWEI.CHEN | 2015.07.07 |
| CHECKED | | |
| APPROVALS | | |

TOLERANCES ARE: 30~以上 ±0.30; 10~30 ±0.20; 5~10 ±0.15; ~5 ±0.10; ANGLE ±2°

GEPU 歌普

TITLE:

PART NO. GP01-3045WRS-NP-L

UNIT: mm | SCALE: 1:1 | PROJ:

DRAWING NO. | SHEET 1 OF 1