ROHS

www.gepu.tw

孔数	A	B
2	3.96	8.02
3	7.92	11.98
4	11.88	15.94
5	15.84	19.90
6	19.80	23.86
7	23.76	27.82
8	27.72	31.78
9	31.68	35.74
10	35.64	39.70
11	39.6	43.66
12	43.56	47.62

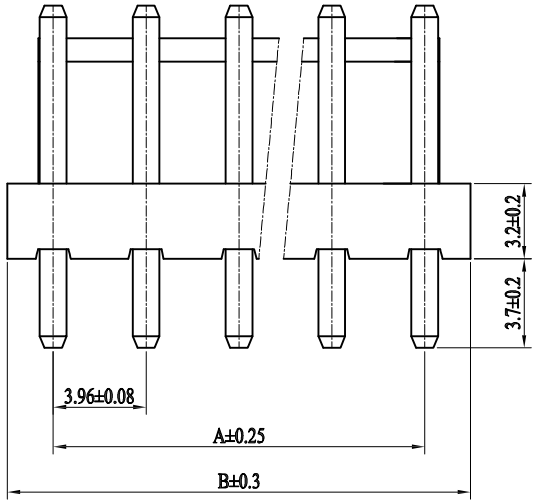

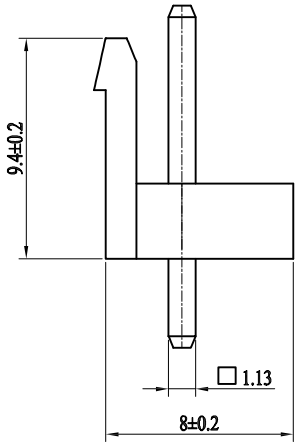

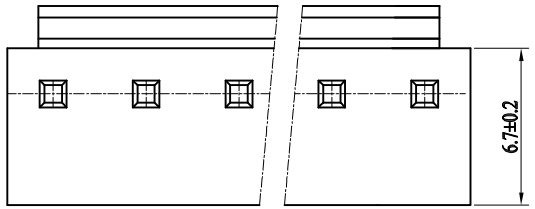

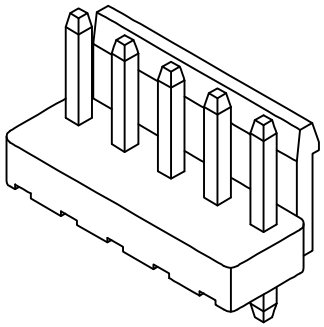

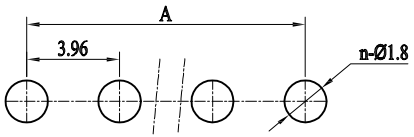

PCB寸法
PCB LAYOUT

■ 技术参数（SPECIFICATIONS）

- ◆ 额定电压：250V AC DC
  Voltage rating: 250V AC DC
- ◆ 额定电流：7.0A AC DC MIN
  Current rating: 7.0A AC DC MIN
- ◆ 耐压值: 1000V AC/minute
  Withstand voltage: 1000V AC/minute
- ◆ 绝缘电阻：1000MΩ MIN
  Insulation resistance: 1000MΩ MIN
- ◆ 接触电阻：0.02Ω MAX
  Contact resistance: 0.02Ω MAX
- ◆ 工作温度: -25°C ~+85°C
  Working Temperature: -25°C~+85°C
- ◆ 间距：3.96 mm
  Pitch: 3.96 mm

■ 材料（MATERIAL）

- ◆ 外壳：尼龙66
  Housing: PA66
- ◆ 插针：黄铜
  Pin: Brass

ECN NO.	REV.	DATE.	DESCRIPTION.	CHANGE.	CHECK.	APPRO.
	A		NEW			

APPROVALS		DATE
DRAWN	ZHIWEI.CHEN	2015.07.07
CHECKED		
APPROVALS		

GEPU歌普

TOLERANCES ARE			ANGLE
	30~以上	±0.30	±2°
	10~30	±0.20	
	5~10	±0.15	
	~ 5	±0.10	

TITLE:			
PART NO.	GP01-3961WV-NP		
UNIT: mm	SCALE: 1:1	PROJ:	
DRAWING NO.		SHEET 1 OF 1	