ROHS

www.gepu.tw

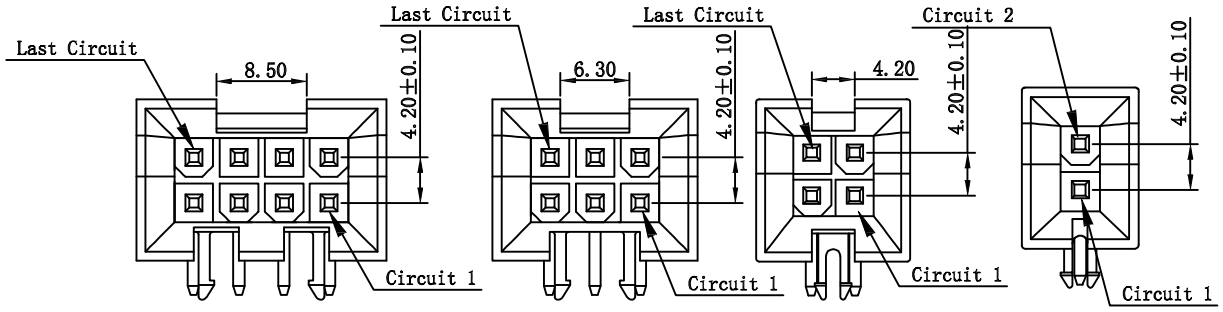

2x04P-2x12P 2x03P 2x02P 2x01P

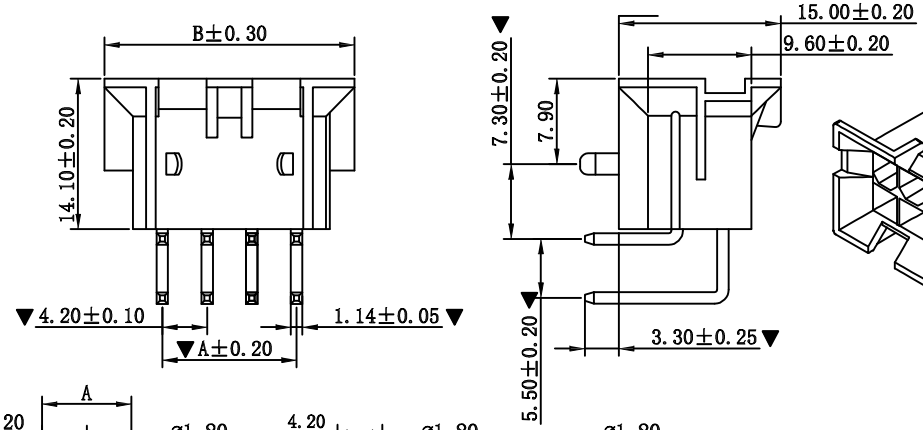

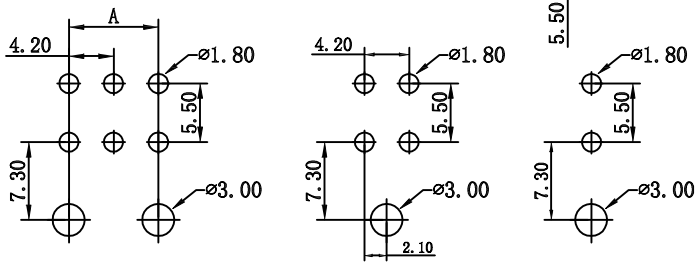

2x03P-2x12P 2x02P 2x01P

PCB LAYOUT:Component Side
Recommended PCB Thickness 1.78MAX

■SPECIFICATIONS

- Voltage rating: 600V AC, DC
- Current rating: 7A, AC, DC
- Withstanding Voltage: 1500V AC/minute
- Insulation resistance:1000MΩ min
- Temperature range: -25° C~+85° C
- Contact resistance: 20mΩ max

■WAFER

- Part No.: 4255WR-2XNP-D
- Poles : 02-24P
- Housing Material: Nylon66 UL94V-2 or UL94V-0
- Pin Material: Brass
- Contact Area Plating: Tin-Plated or Gold-Flash

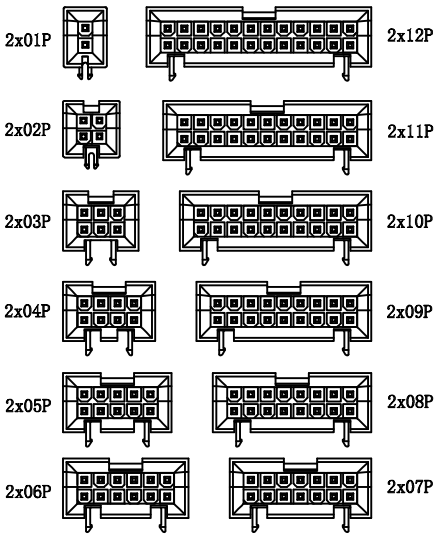

CIRCUIT SIZE LAYOUT

Part No	Dimensions (mm)	
	A	B
2x01		10.80
2x02	4.20	15.00
2x03	8.40	19.20
2x04	12.60	23.40
2x05	16.80	27.60
2x06	21.00	31.80
2x07	25.20	36.00
2x08	29.40	40.20
2x09	33.60	44.40
2x10	37.80	48.60
2x11	42.00	52.80
2x12	46.20	57.00

ECN NO.	REV.	DATE.	DESCRIPTION.	CHANGE.	CHECK.	APPRO.
	A		NEW			

APPROVALS		DATE
DRAWN	ZHIWEI.CHEN	2015.07.07
CHECKED		
APPROVALS		

TOLERANCES ARE: 30~以上 ±0.30; 10~30 ±0.20; 5~10 ±0.15; ~ 5 ±0.10; ANGLE ±2°

GEPU 歌普

TITLE: 4.20mm Crimp Style Connector

PART NO. GP01-4255WR-2xNP-D

UNIT: mm SCALE: 1:1 PROJ:

DRAWING NO. SHEET 1 OF 1