ROHS

www.gepu.tw

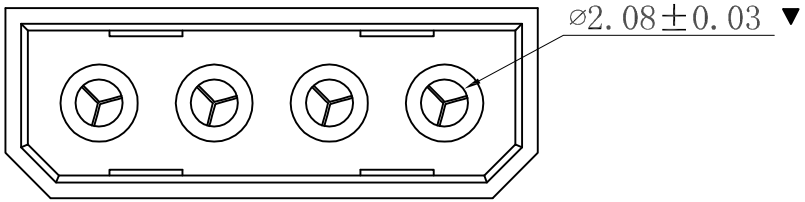

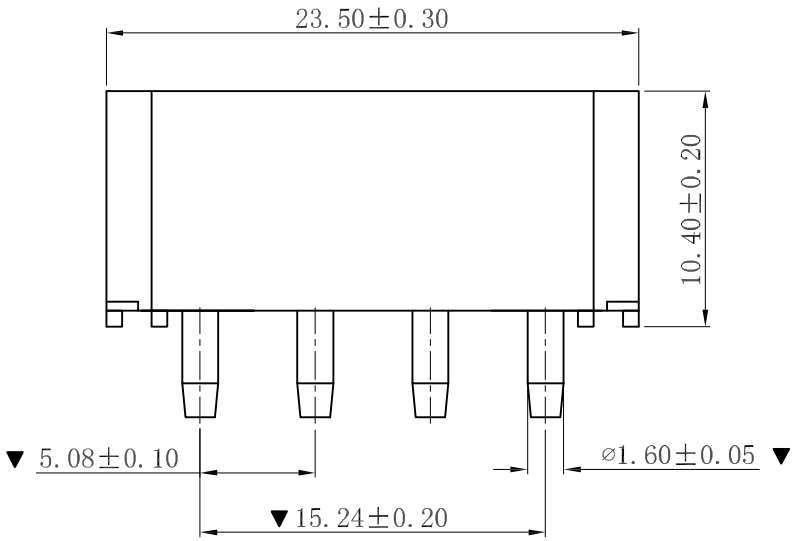

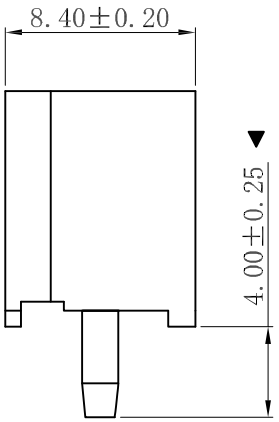

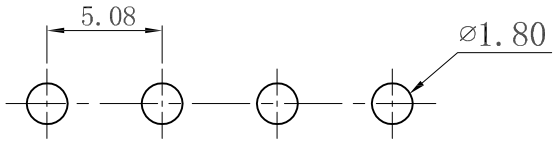

P.C.B LAYOUT: TOP VIEW
TOLERANCE: ±0.05mm

■ SPECIFICATIONS

- Voltage rating: 250V AC, DC
- Current rating: 5A, AC, DC
- Withstanding Voltage: 1500V AC/minute
- Insulation resistance:1000MΩ min
- Temperature range: -25° C~+85° C
- Contact resistance: 20mΩ max

■ WAFER

- Part No.: 5082WV-04P
- Housing Material: PA66 UL94V-2 or UL94V-0
- Pin Material: Brass
- Contact Area Plating: Tin-Plated
- The Dimension Marked "▼" Must Be Recorded

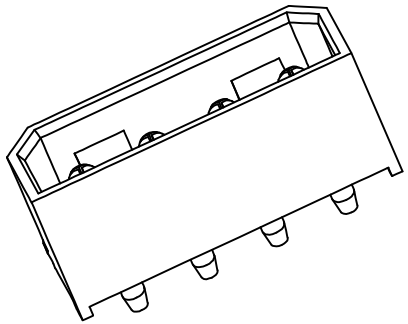

ECN NO.	REV.	DATE.	DESCRIPTION.	CHANGE.	CHECK.	APPRO.
———	A	———	NEW	———	———	———

APPROVALS		DATE
DRAWN	ZHIWEI.CHEN	2015.07.07
CHECKED		
APPROVALS		

TOLERANCES ARE			ANGLE
	30~以上	±0.30	±2°
	10~30	±0.20	
	5~10	±0.15	
	~ 5	±0.10	

GEPU 歌普

TITLE:	5.08mm 180° 空心
PART NO.	GP01-5082WV-4P-K
UNIT: mm	SCALE: 1:1
DRAWING NO.	———

PROJ: SHEET 1 OF 1