ROHS

www.gepu.tw

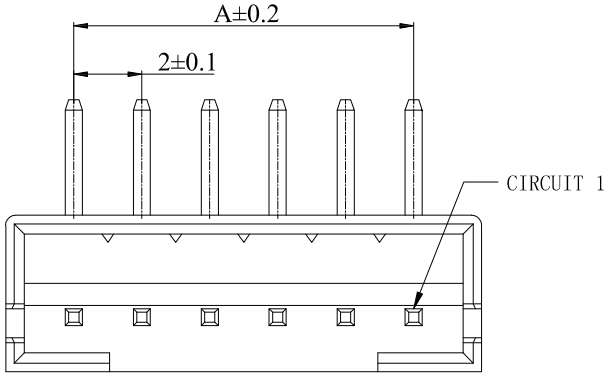

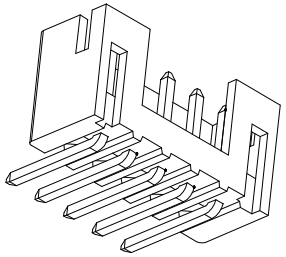

技术参数（SPECIFICATIONS ）

额定电压：250V AC DC
Voltage rating: 250V AC DC
额定电流：2.0A AC DC(24AWG)
Current rating: 2.0A AC DC(24AWG)
耐压值: 800V AC/minute
Withstand voltage: 800V AC/minute
绝缘电阻：1000MΩ MIN
Insulation resistance: 1000MΩ MIN
接触电阻：0.02Ω MAX(初始值)
Contact resistance: 0.02Ω MAX(Initial)
工作温度: -25°C~+85°C
Working Temperature: -25°C~+85°C
间距：2.0 mm
Pitch: 2.0mm

材料（MATERIAL ）

绝缘体: 尼龙66 UL94V-0
Insulator: PA66 UL94V-0
接触针：黄铜镀锡
Contact PIN: Brass TIN-Plating

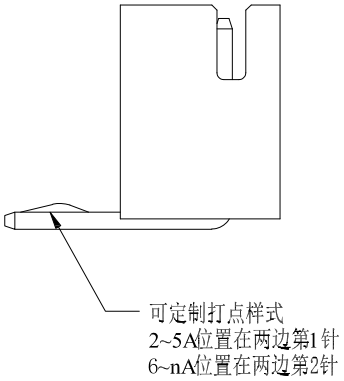

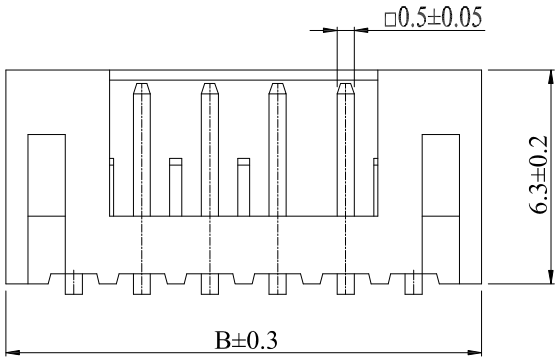

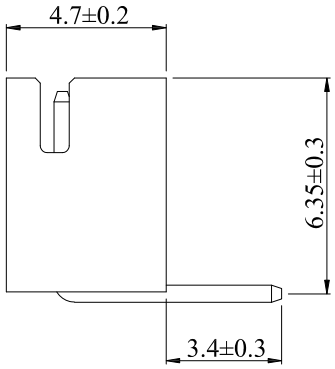

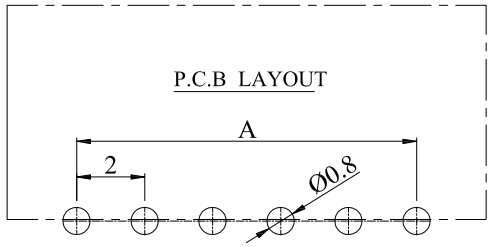

POLES	P/N	A	B
2	2P	2.0	6.1
3	3P	4.00	8.10
4	4P	6.00	10.10
5	5P	8.00	12.10
6	6P	10.00	14.10
7	7P	12.00	16.10
8	8P	14.00	18.10
9	9P	16.00	20.10
10	10P	18.00	22.10
11	11P	20.00	24.10
12	12P	22.00	26.10
13	13P	24.00	28.10
14	14P	26.00	30.10
15	15P	28.00	32.10
16	16P	30.00	34.10

ECN NO.	REV.	DATE.	DESCRIPTION.	CHANGE.	CHECK.	APPRO.
———	A	———	NEW	———	———	———

APPROVALS		DATE
DRAWN	ZHIWEI.CHEN	2021.09.07
CHECKED		
APPROVALS		

TOLERANCES ARE: 30~以上 ±0.30; 10~30 ±0.20; 5~10 ±0.15; ~ 5 ±0.10; ANGLE ±2°

GEPU 歌普

TITLE:

PART NO. GP01-2001WR-NP

UNIT: mm SCALE: 1:1 PROJ:

DRAWING NO. ———— SHEET 1 OF 1